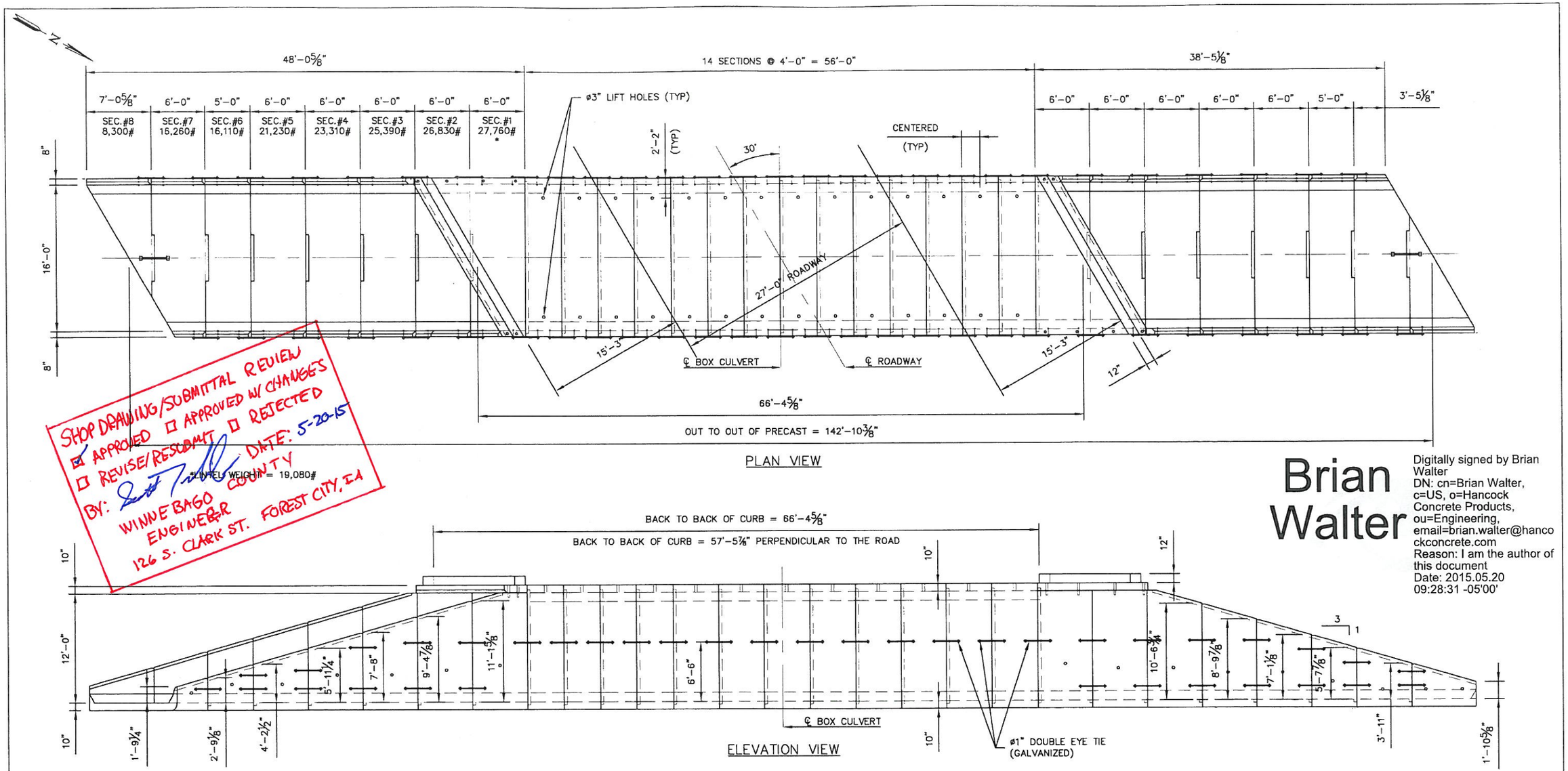

PLAN VIEW

*LINTEL WEIGHT = 19,080#

STOP DRAWING/SUBMITTAL REVIEW
☑ APPROVED ☐ APPROVED W/ CHANGES
☐ REVISE/RESUBMIT ☐ REJECTED
BY: DATE: 5-20-15
WINNEBAGO COUNTY ENGINEER
126 S. CLARK ST. FOREST CITY, IA

Brian Walter

Digitally signed by Brian Walter
DN: cn=Brian Walter, c=US, o=Hancock Concrete Products, ou=Engineering, email=brian.walter@hancockconcrete.com
Reason: I am the author of this document
Date: 2015.05.20 09:28:31 -05'00'

ELEVATION VIEW

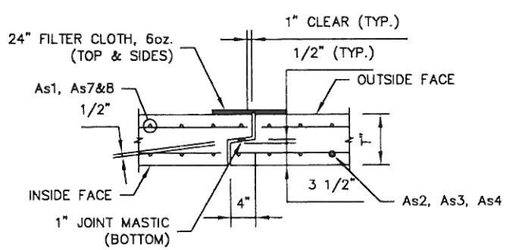

TONGUE & GROOVE JOINT DETAIL

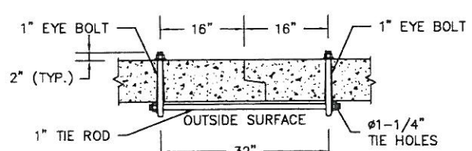

DOUBLE EYE TIE DETAIL
(GALVANIZED)

STRUCTURAL DESIGN

LICENSED PROFESSIONAL ENGINEER BRIAN WALTER 15346 IOWA

I hereby certify that this engineering document was prepared by me or under my direct personal supervision and that I am a duly licensed Professional Engineer under the laws of the State of Iowa.

Signature 5/20/15 Date

BRIAN WALTER
Printed or Typed Name

My license renewal date is December 31, 2015

Pages or sheets covered by this seal: Sheet 1,2, & 3 OF 3

Hancock®

16' X 12' X 56'
CONCRETE BOX CULVERT

LOCATION: WINNEBAGO COUNTY, IOWA

CONTRACTOR: WINNEBAGO COUNTY

DESIGN SHEET NO. 1 OF 3 FILE NO. 15-0373 DATE: 4/9/15

DESIGNED BY BDW	CHECKED BY BDW		WINNEBAGO COUNTY, IA	PROJECT NUMBER I-12-N1	SHEET NUMBER 1
DETAILED BY JAN	CADD FILE				

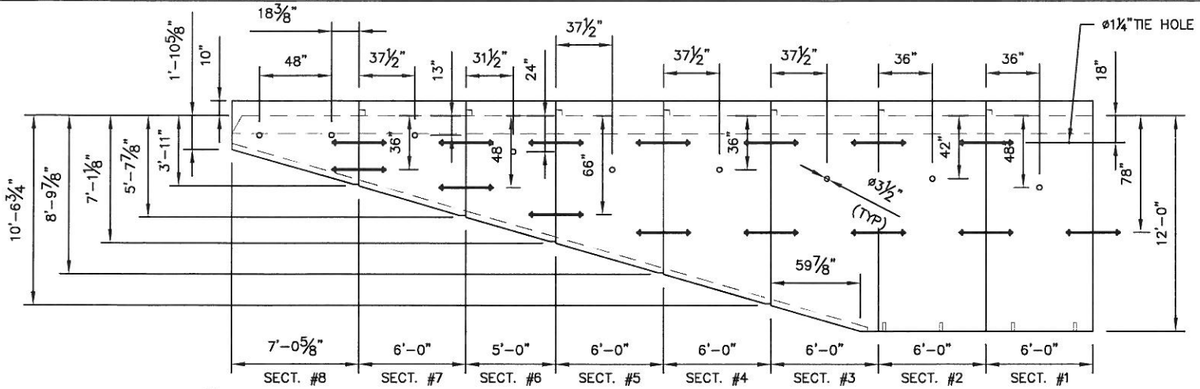

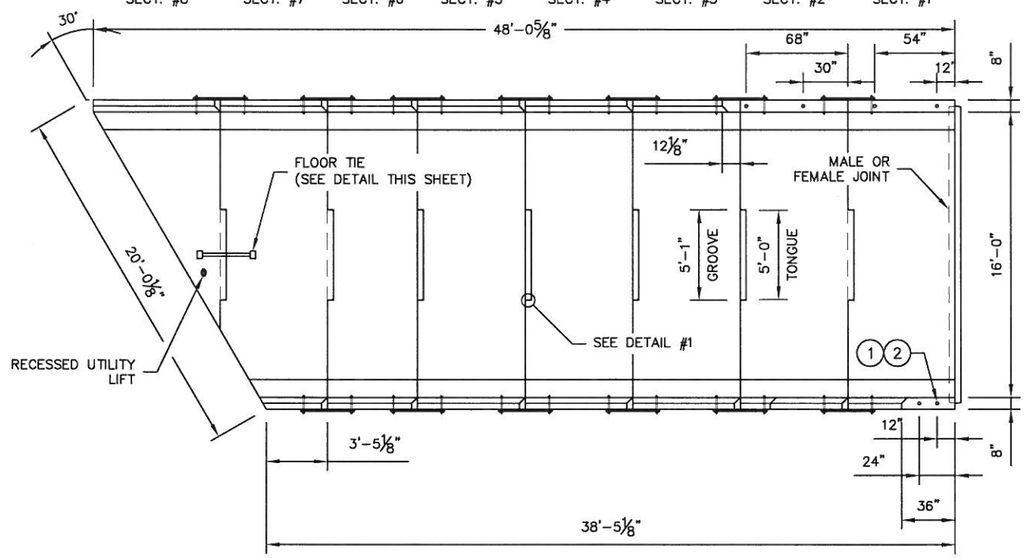

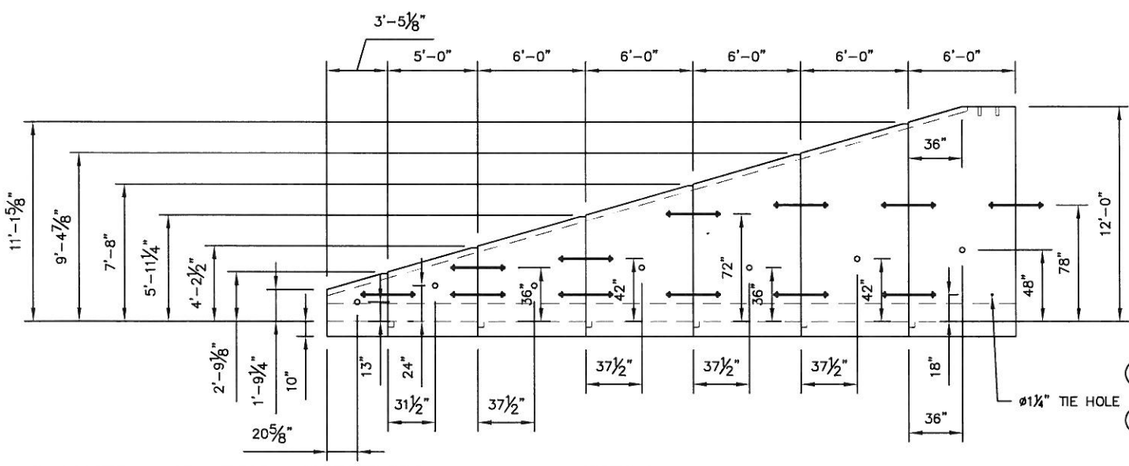

#1 SECTION				
	LENGTH	AREA REQ'D	STEEL FABRIC USED	AREA PROVIDED
As1	21' 4"	0.960	2(2x8 – W8.4 X W4.0)	1.008
As1	21' 4"	0.960	2(2x8 – W8.4 X W4.0)	1.008
As2	16' 8"	0.687	2x8 – W12.4 X W5.0	0.744
As3	12' 4"	0.200	2x8 – W3.4 X W4.0	0.204
As4	12' 4"	0.200	2x8 – W3.4 X W4.0	0.204

#2 SECTION				
	LENGTH	AREA REQ'D	STEEL FABRIC USED	AREA PROVIDED
As1	21' 4"	0.960	2(2x8 – W8.4 X W4.0)	1.008
As1	20' 8"	0.960	2(2x8 – W8.4 X W4.0)	1.008
As2	16' 8"	0.687	2x8 – W12.4 X W5.0	0.744
As3	11' 4"	0.200	2x8 – W3.4 X W4.0	0.204
As4	12' 4"	0.200	2x8 – W3.4 X W4.0	0.204

#3 SECTION				
	LENGTH	AREA REQ'D	STEEL FABRIC USED	AREA PROVIDED
As1	21' 4"	0.960	2(2x8 – W8.4 X W4.0)	1.008
As1	18' 8"	0.960	2(2x8 – W8.4 X W4.0)	1.008
As2	16' 8"	0.687	2x8 – W12.4 X W5.0	0.744
As3	10' 0"	0.200	2x8 – W3.4 X W4.0	0.204
As4	12' 4"	0.200	2x8 – W3.4 X W4.0	0.204

#4 SECTION				
	LENGTH	AREA REQ'D	STEEL FABRIC USED	AREA PROVIDED
As1	20' 0"	0.736	2x8 – W12.4 X W5.0	0.744
As1	17' 4"	0.736	2x8 – W12.4 X W5.0	0.744
As2	16' 8"	0.649	2x8 – W12.4 X W5.0	0.744
As3	8' 0"	0.200	2x8 –W3.4 X W4.0	0.204
As4	10' 8"	0.200	2x8 –W3.4 X W4.0	0.204

#5 SECTION				
	LENGTH	AREA REQ'D	STEEL FABRIC USED	AREA PROVIDED
As1	18' 0"	0.396	2x8 – W7.2 X W4.0	0.432
As1	15' 4"	0.396	2x8 – W7.2 X W4.0	0.432
As2	16' 8"	0.573	2x8 – W10.5 X W4.2	0.630
As3	6' 0"	0.200	2x8 – W3.4 X W4.0	0.204
As4	9' 4"	0.200	2x8 – W3.4 X W4.0	0.204

#6 SECTION				
	LENGTH	AREA REQ'D	STEEL FABRIC USED	AREA PROVIDED
As1	16' 8"	0.273	2x8 – W5.0 X W4.0	0.300
As1	13' 4"	0.273	2x8 – W5.0 X W4.0	0.300
As2	16' 8"	0.535	2x8 – W9.0 X W4.0	0.540
As3	4' 4"	0.200	2x8 – W3.4 X W4.0	0.204
As4	7' 4"	0.200	2x8 – W3.4 X W4.0	0.204

#7 SECTION				
	LENGTH	AREA REQ'D	STEEL FABRIC USED	AREA PROVIDED
As1	25' 8"	0.240	2x8 – W4.0 X W4.0	0.240
As2	16' 8"	0.459	2x8 – W8.4 X W4.0	0.504
As3	3' 0"	0.200	2x8 – W3.4 X W4.0	0.204
As4	5' 8"	0.200	2x8 – W3.4 X W4.0	0.204

#8 SECTION				
	LENGTH	AREA REQ'D	STEEL FABRIC USED	AREA PROVIDED
As1	16' 0"	0.240	2x8 – W4.0 X W4.0	0.240
As2	12' 0"	0.383	2x8 – W6.5 X W4.0	0.390
As4	4' 0"	0.200	2x8 – W3.4 X W4.0	0.204

(1) PLACE #8 X 12" LONG DOWEL INTO 2" DIA. HOLE IN TOP OF WALL SECTION AND 3" DIA. HOLE IN LINTEL BEAM. FILL HOLES WITH GROUT.

(2) GROUT SHALL CONSIST OF 1 PART CEMENT AND 2 PARTS SAND. USE AIR ENTRAINED PORTLAND CEMENT. GROUT MIX SHALL HAVE A MAXIMUM SLUMP OF 4".

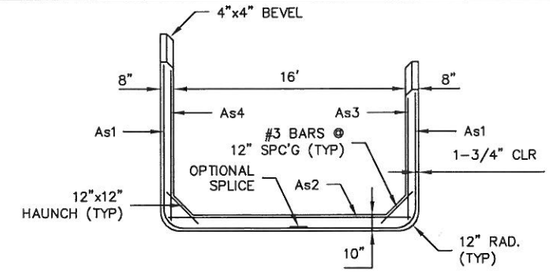

END SECTION REINFORCEMENT DETAIL

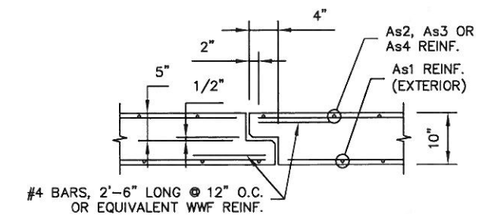

TONGUE & GROOVE JOINT DETAIL

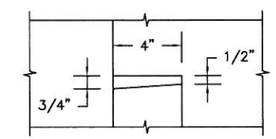

DETAIL #1

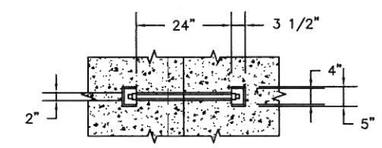

FLOOR TIE – TOP VIEW

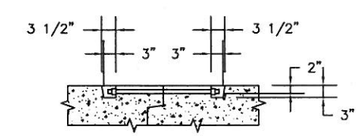

FLOOR TIE – END VIEW

NOTES

REBAR: ASTM A615, fy = 60 ksi
WWF TO BE PER ASTM A1064, fy = 65 ksi
2" X 8" WIRE SPACING, 2" SPACING ON MAIN & 8" ON LONGITUDINAL WIRE.

LONGITUDINAL REINFORCING = 0.06 SQIN/FT

1 3/4" TYPICAL COVER ON REINFORCING.

CONCRETE STRENGTH: MINIMUM f'c = 5000 psi

Hancock®

WINNEBAGO COUNTY, IOWA

PRECAST CONCRETE END SECTION
SINGLE OR MULTI-BARREL
FOR SKEWS 7.5° TO 45°

PROJECT: I-12-N1

SHEET NO. 2 OF 3 SHEETS

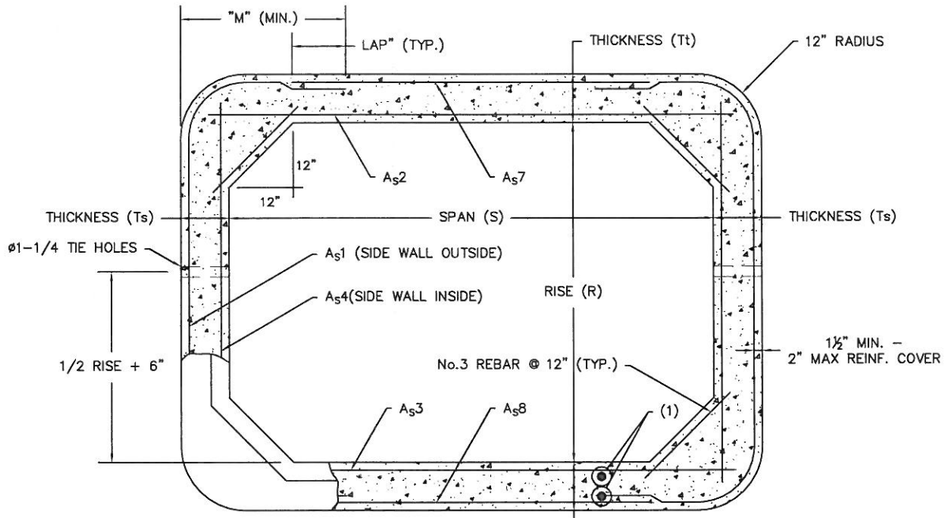

BARREL SECTION

LOADING, DESIGN METHODS AND MATERIALS

DESIGN REQUIREMENTS:
THE PRECAST CULVERT SECTIONS ARE DESIGNED PER ASTM 1577-14 AND AASHTO.
DEAD LOAD
CONCRETE WT = 150 PCF
SOIL WT = 120 PCF
LATERAL PRESSURE COEF.
MINIMUM = 0.25
MAXIMUM = 0.50

LIVE LOAD = HL93 & 25K TANDEM
MINIMUM LAYING LENGTH = 4'-0"
WWF ASTM A1064 fy = 65 ksi
CONCRETE STRENGTH MINIMUM f'c = 5 KSI

(1) MINIMUM LONGITUDINAL REINFORCEMENT SHALL BE 0.06 SQ. IN. PER FT., UNLESS NOTED OTHERWISE. BOX CULVERT DESIGN AND ANALYSIS IS PERFORMED ON THE ACPA "BOXCAR 3.1.2" COMPUTER PROGRAM.

16' x 12' BARREL REINFORCEMENT

DESIGN OVERFILL 2 FT. - 7 FT			LENGTH	AREA REQ'D	STEEL FABRIC USED	AREA PROVIDED
		As1	21' 4"	0.882	2x8 - W14.7 X W5.9	0.882
SPAN - FT.	16	As2	16' 8"	1.504	2(2x8 - W12.6 X W5.1)	1.512
RISE - FT.	12	As3	16' 8"	1.560	2(2x8 - W13.0 X W5.2)	1.560
Tt - IN.	10	As4	12' 8"	0.236	2x8 - W4.0 X W4.0	0.240
Tb - IN.	10	As7/8	11' 4"	0.240	2x8 - W4.0 X W4.0	0.240
Ts - IN.	8					
M - IN.	53.5					
LAP - IN.	15					

CONSTRUCTION NOTES

PRECAST BOX CULVERT BARREL SECTIONS SHALL BE LAID WITH THE GROOVE END OF EACH SECTION UP-GRADE.

PRECAST BOX CULVERT SECTIONS TO BE PLACED ON 6" OF GRANULAR BEDDING OR OTHER SUITABLE MATERIAL APPROVED BY THE ENGINEER.

MAXIMUM JOINT OPENING SHALL BE 3/4".

ALL JOINTS SHALL BE SEALED WITH 1" BUTYL ROPE GASKET MATERIAL ALONG THE BOTTOM AND UP THE SIDES TO 6" ABOVE THE TOP OF THE HAUNCH.

2 FT. WIDE ENGINEERING FABRIC SHALL BE PLACED OVER JOINT ON THE TOP AND SIDES, AND CENTERED OVER THE JOINT (1 FT. ON EACH SIDE), WITH 18" OVERLAP.

LIFT HOLES SHALL BE PLUGGED WITH PRECAST CONCRETE PLUGS, OR "POPIT" BRAND CONCRETE PLUGS, SEALED AND COVERED WITH MASTIC OR MORTAR.

CULVERT TIE ASSEMBLIES SHALL BE ASTM A709 GRADE 36 & GALVANIZED ACCORDING TO SPECIFICATIONS.

BACKFILL MATERIAL SHALL BE PLACED AND COMPACTED IN LIFTS ON BOTH SIDES OF THE STRUCTURE SUCH THAT THE DIFFERENCE IN ELEVATION FROM ONE SIDE TO THE OTHER IS NEVER GREATER THAN 2 FEET.

LINTEL NOTES

PRECAST LINTEL BEAMS AND PARAPETS SHALL BE CONSTRUCTED IN ACCORDANCE WITH PRECAST BARREL AND END SECTION DETAILS AND NOTES, EXCEPT AS MODIFIED BELOW:

REINFORCING FOR PRECAST LINTELS AND PARAPETS SHALL BE EITHER WELDED WIRE FABRIC (WWF) MEETING THE REQUIREMENTS OF ASTM A1064 (65 KSI) OR REINFORCING BARS MEETING THE REQUIREMENTS OF ASTM A615 (60 KSI) WIRE SPACING FOR WWF SHALL BE AS NOTED.
CONCRETE STRENGTH: MINIMUM f'c = 5000 PSI

PLACE NO. 8 DOWEL, 1'-0" LONG INTO ø2" HOLE IN THE TOP OF THE WALL SECTION AND ø3" HOLE IN THE LINTEL BEAM. FILL HOLES WITH GROUT.

GROUT SHALL CONSIST OF 1 PART CEMENT AND 2 PARTS SAND. USE AIR ENTRAINED PORTLAND CEMENT. GROUT MIX SHALL HAVE A MAXIMUM SLUMP OF 4".

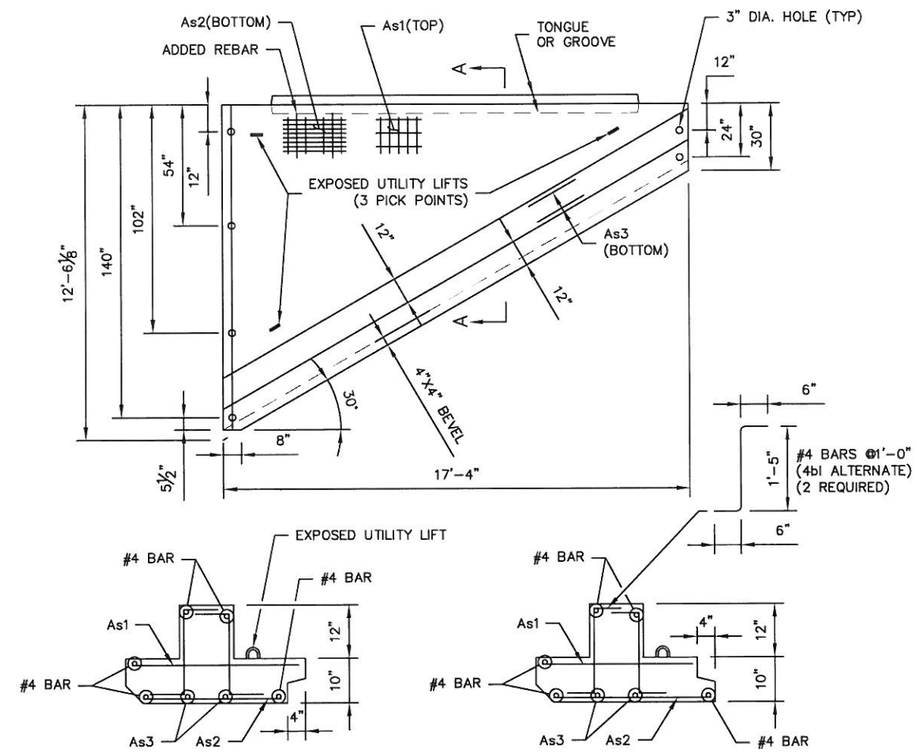

SECTION A-A
(GROOVE)

SECTION A-A
(TONGUE)

DESCRIPTION	QTY	LENGTH	SPACES	AREA REQ.	STEEL FABRIC/REBAR USED	ACTUAL AREA	E1 #
As1 (AT)	1	17'-0"	51	0.20 x 0.20	6x4 - W10.0 x W6.7, 96"	0.20 x 0.20	82-03119
As2 (A2)	6*	17'-0"	25.5	1.34	2x8 - W12.4 x W5.0, 56"	1.49	82-03113
		17'-0"			2x8 - W12.4 x W5.0, 56"		82-03113
ADDED REBAR (A1)	24	VARIES (11'-" to 2'-0")		0.97	#8 BARS @ 9" (Max.)	1.05	82-00021
As3 (PARA REINF.)	7	19'-9"		3.00	#6 BAR	3.08	82-00016
#4 BAR	5	19'-9"			#4 BAR		82-00005
B401	40	SEE DETAIL ABOVE			BENT #4 BAR @ 12" (Max.)		84-04443

*6 TOTAL SHEETS REQUIRED FOR ONE PAIR OF LINTELS.
1-3/4" (TYP.) COVER ON REINFORCING
LINTEL WEIGHT = 19,080#

Hancock

WINNEBAGO COUNTY, IOWA

PRECAST CONCRETE END SECTION
SINGLE OR MULTI-BARREL
FOR SKEWS 7.5° TO 45°

PROJECT: I-12-N1

SHEET NO. 3 OF 3 SHEETS